Model: 1654 Negative Pressure Specifications

The Vent-A-Kiln model 1654 negative pressure ventilation system shall include a 54.0" diameter metal spun aluminum hood tapering to a 6.0" diameter exit. A single speed motor with fan (blower) mounted to wall by means of a support bracket, shall draw and propel exhaust fumes and heat via a flexible hose to a exterior surface mounted gravity operated louver. The placement of the hood and blower subassembly shall be user adjustable via an overhead pulley and counterweight system.

1) Conical collection hood:
   - 54.0" diameter, 0.063 gage aluminum, alloy 1100-0.

2) Non-explosion proof blower:
   - $\frac{1}{8}$ hp, 1/60/115 motor.
   - 450 cfm @ 0.0" w.g., 3.6 amps, 1600 rpm.
   - Maximum continous motor Temperature 250 deg. f..
   - Sound data; approximate db at 5 feet: high 68db, low 54db.

3) Flexible exhaust hose:
   - Triple ply laminate, aluminized polyester face and an aluminum foil backing.
   - Corrosion, moisture, temperature (250 deg. f.), and flame resistant.
   - 6.0" diameter, 10' (ft.) length.
   - Flexible hose fastened by plastic hose clamps (qty=2).
   - UL listed number 723.
   - Cut to shortest length permissible.

4) Exterior surface mounted louver:
   - 6.0" diameter discharge.
   - Bird screen.
   - Three (3) gravity operated shutters.

5) $\frac{3}{16}$" diameter plastic coated steel cable:
   - 15' (ft.) length.
   - Two (2) $\frac{3}{16}$" galvanized steel cable clamps for fastening cable to counterweight and blower.

6) Counterweight:
   - 3.0" diameter cold rolled steel, painted VAF/VAK black.
   - weight = 28.0 lbs..

7) Overhead pulley system:
   - 1.0"x1.0"x36.0" length structural tubing.
   - Five (5) ball bearing pulleys.
   - Four (4) slide brackets for hanging of system, alternate left to right.
   - Five (5) pulley safety straps.

8) Blower wall support bracket:
   - 12 gage steel.
   - Painted VAF/VAK black

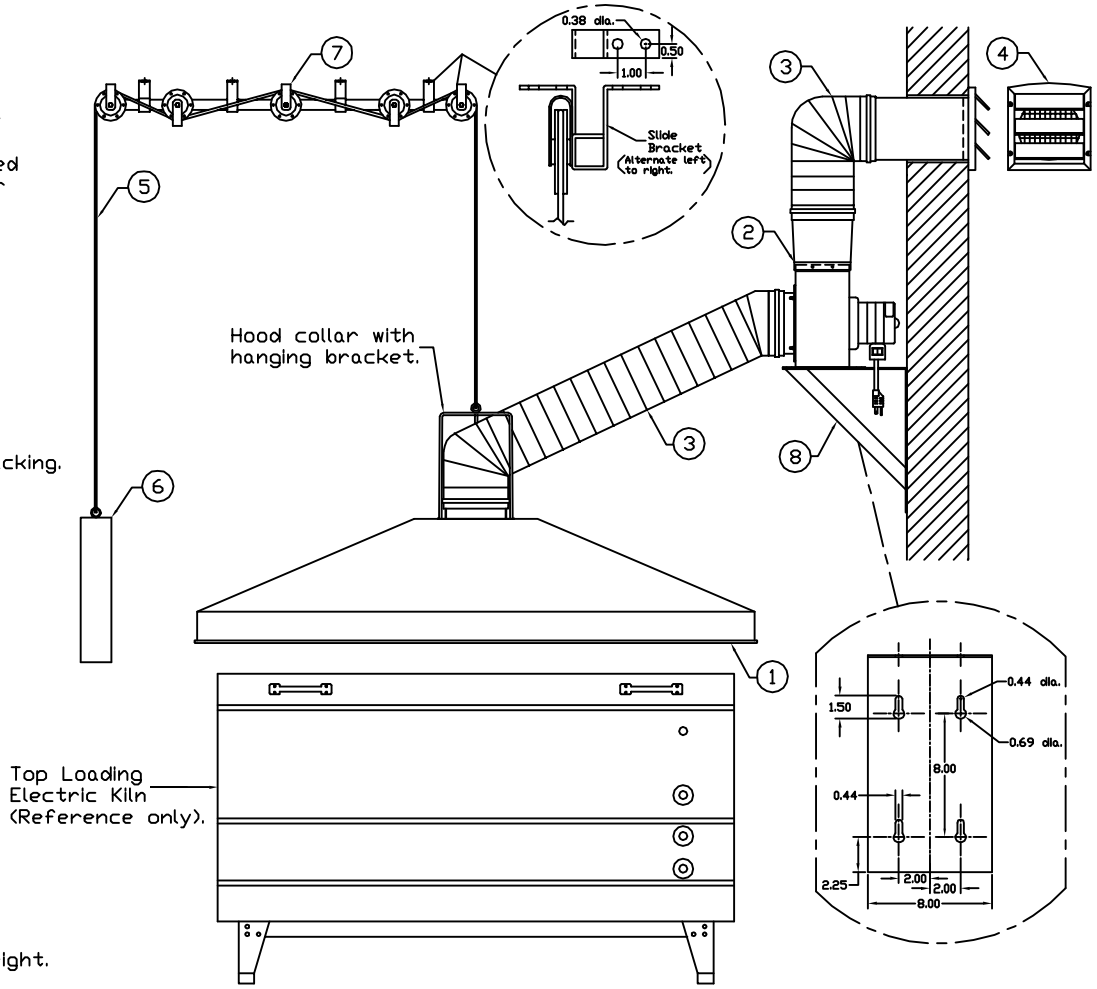

All Dimensions Inches

LETTER	ALTERATION	DATE	BY
A	Blower motor had two speeds	6/16/09	B.Brandon

UNLESS SHOWN OTHERWISE TOLERANCES SHOULD BE:
1.) .XXX ± .005
2.) .XX ± .01
3.) FRACTIONAL DIMENSIONS ± 1/32"
4.) ANGLES ± 0° 30'

ALL INFORMATION CONTAINED HEREIN IS PROPRIETARY; AND MUST NOT BE REPRODUCED OR MADE PUBLIC WITHOUT WRITTEN CONSENT FROM Vent-A-Fume/Vent-A-Kiln Corp.

Vent-A-Fume
Vent-A-Kiln Corp.
51 Botsford Place
Buffalo, N.Y. 14216

Negative Pressure

TITLE: Model: 1654 System Layout (P-10BP Blower)

PROJECT NUMBER	XXX	DRAWN BY	B. Brandon
DATE	8/27/03	CHECKED BY	
SCALE	NTS	BILL OF MAT'L	
NEXT ASS'Y			
DWG. NO.	B-1069	REV.	A